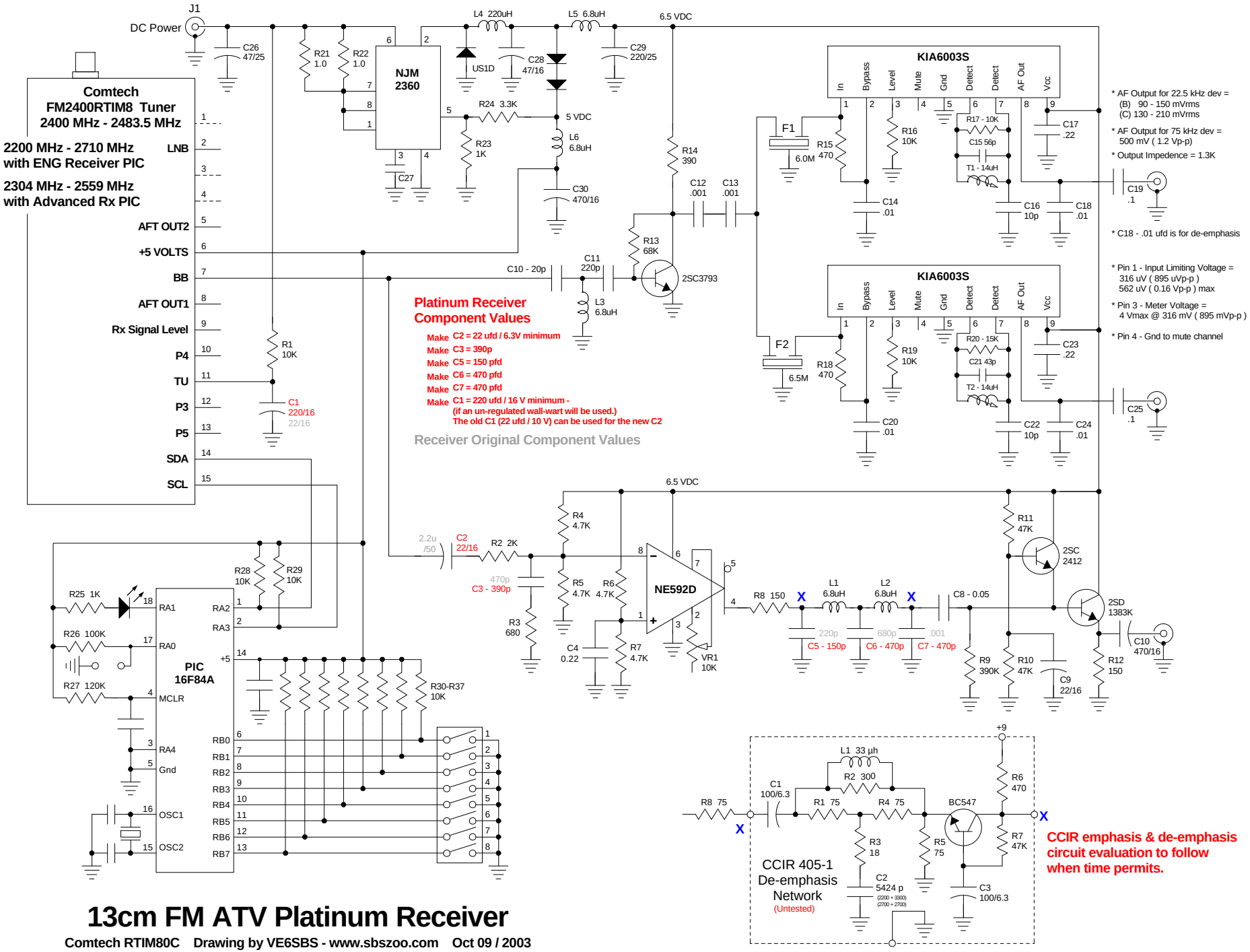

13cm FM ATV Platinum Receiver

Comtech RTIM80C Drawing by VE6SBS - www.sbszoo.com Oct 09 / 2003